Grove Manitowoc National Crane Potain

Grove RT540E

Product Guide

Maxim Crane Works, L.P.
1-877-MAX-LIFT
maximcrane.com

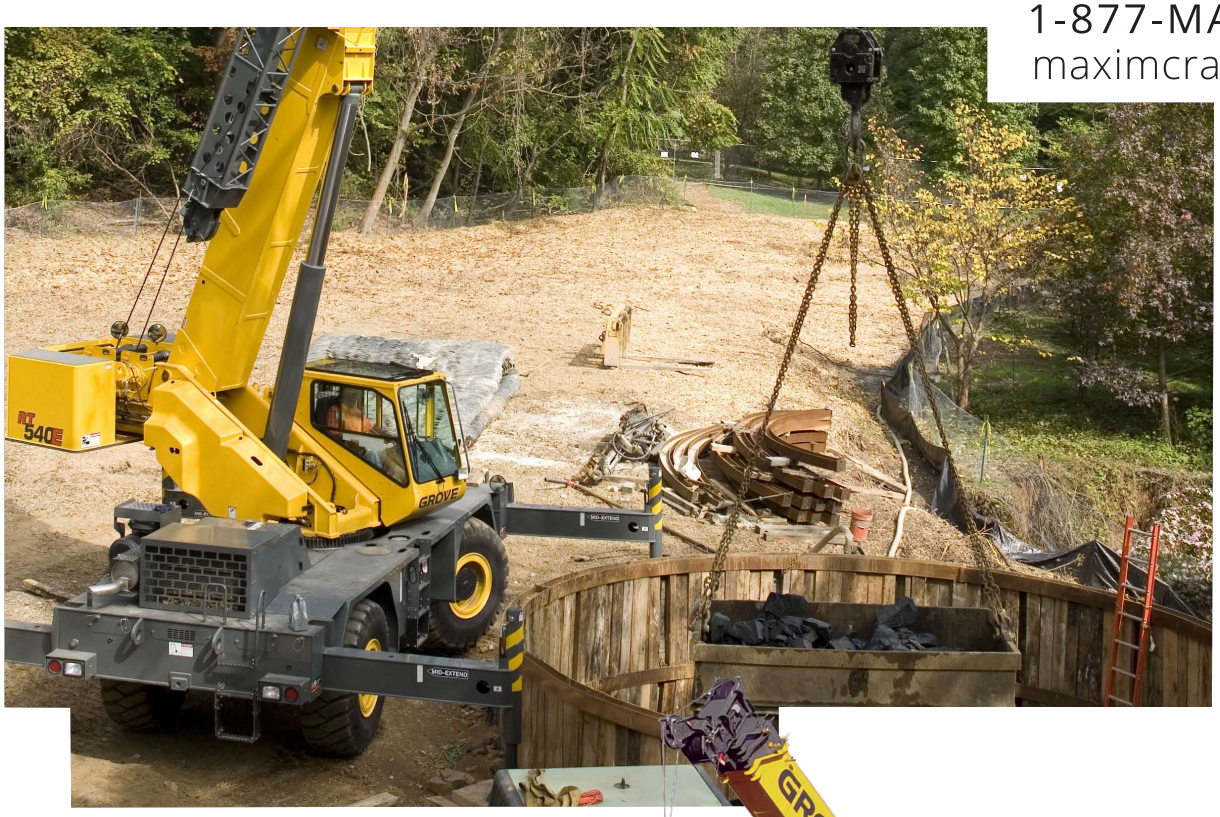

Features

- 35 t (40 USt) capacity
- 9,8 m – 31 m (32 ft – 102 ft) 4-section full power boom
- 7,9 m – 13,7 m (26 ft – 45 ft) offsettable telescopic swingaway extension
- Dual-axis electric joystick controllers
- Full frame decking
- Rounded cab design
- 119 kW (160 hp) Cummins diesel engine (Tier III)

Features

Boom shape

The RT540E incorporates a rectangular boom shape made from 100 k.s.i. steel which eliminates weight and maximizes structural capacities.

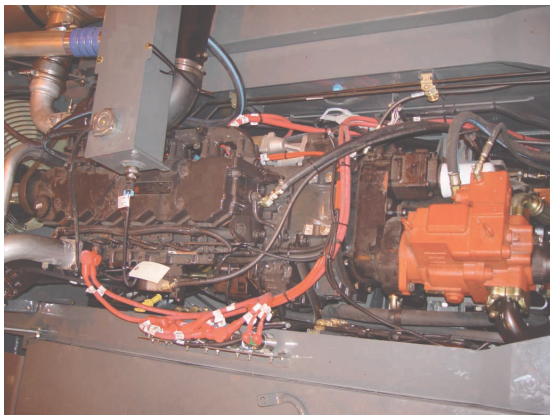

Engine

Cummins QSB 6.7 L diesel engine provides plenty of power at the job site and meets current emission standards.

Tip height

Maximum tip height of 47 m (154 ft) with 13,7 m (45 ft) telescopic extension.

Cab

Rounded steel cab design provides aesthetic appeal.

Control panel

Automotive-style dash control panel is designed to offer a less cluttered look while still offering full instrumentation.

Contents

Specifications	4
Dimensions and weights	7
Working range	8
Load charts	9
Load handling	14

Specifications

Superstructure

Boom

9,8 m - 31 m (32 ft - 102 ft) four-section, synchronized full power boom.

Maximum tip height: 33,6 m (110 ft).

* Optional fixed swingaway extension

7,9 m (26 ft) offsettable fixed swingaway extension. Offsets at 0° and 30°. Stows alongside base boom section.

Maximum tip height 41,1 m (135 ft).

* Optional telescopic swingaway extension

7,9 m - 13,7 m (26 ft - 45 ft) offsettable telescopic lattice swingaway extension. Offsets at 0°, 15° and 30°. Stows alongside base boom section.

Maximum tip height 47 m (154 ft).

Boom nose

Four nylatron sheaves mounted on heavy duty tapered roller bearings with removable pin-type rope guards. Quick reeve type boom nose.

Boom elevation

One double-acting hydraulic cylinder with integral holding valve provides elevation from -3° to +78°.

Load moment and anti-two block system

Standard "Graphic Display" load moment and anti-two block system with audio-visual warning and control lever lockout. These systems provide electronic display of boom angle, length, radius, tip height, relative load moment, maximum permissible load, load indication and warning of impending two-block condition. The standard Work Area Definition System allows the operator to pre-select and define safe working areas. If the crane approaches the pre-set limits, audio-visual warnings aid the operator in avoiding job-site obstructions.

Cab

Full vision, all steel fabricated with acoustical lining and tinted safety glass throughout. Deluxe seat incorporates armrest-mounted electric dual-axis controllers. Dash panel incorporates gauges for all engine functions. Other standard features include: tilt steering wheel, hot water heater, air conditioning, cab circulating air fan, sliding side and rear windows, sliding skylight with electric wiper and sunscreen, electric windshield wash/wipe, fire extinguisher and seat belt.

Swing

Single speed, planetary swing drive with foot applied multi-disc wet brake. Spring applied, hydraulically released swing brake. Single position mechanical house lock, operated from cab.

Maximum speed: 2 rpm.

Counterweight

4305 kg (9490 lb) pinned to superstructure.

Hydraulic system

Two main pumps, one (1) piston and one (1) gear with a combined capacity of 316,5 LPM (83.6 GPM). Maximum operating pressure: 275,7 bar (4000 psi). Three section pressure compensated valve bank. Return line type filter with full flow by-pass protection and service indicator. Replaceable cartridge with micron filtration rating of 5/12/16. 396 L (104.6 gal) hydraulic reservoir. System pressure test ports.

Hoist specifications (HP15C0-17G) main and auxiliary hoist

Planetary reduction with automatic spring applied multi-disk wet brake. Electronic hoist drum rotation indicators, and hoist drum cable followers.

Maximum single line pull:

- 1st layer: 5280 kg (11,640 lb)
- 3rd layer: 4323 kg (9530 lb)
- 5th layer: 3656 kg (8060 lb)

Maximum permissible line pull:

- 5280 kg (11,640 lb) with 6 x 37 class rope
- 5280 kg (11,640 lb) with 35 x 7 class rope

Maximum single line speed: 136 m-min (445 fpm)

Rope construction:

- 6 x 36 EIPS IWRC, Special Flexible
- 35 x 7 Flex-X, Rotation Resistant

Rope diameter: 16 mm (5/8 in)

Rope length:

- Main hoist: 137 m (450 ft)
- Auxiliary hoist: 137 m (450 ft)

Maximum rope stowage: 181 m (596 ft)

Denotes optional equipment

Specifications

Carrier

Chassis

Box section frame fabricated from high-strength, low alloy steel. Combination lift/tie-down/towing lugs.

Outrigger system

Four hydraulic telescoping single-stage double box beam outriggers with inverted jacks and integral holding valves. Three position setting, 0%, 50% and fully extended. All steel fabricated quick release type outrigger floats, 362 mm (14.25 in) square.

Maximum outrigger pad load 26 300 kg (58,000 lb).

Outrigger controls

Controls and crane level indicator located in cab

Engine (Tier III)

Cummins QSB 6.7 L diesel, six cylinders, 119 kW (160 bhp) (Gross) @ 2500 rpm.

Maximum torque: 732 Nm (540 ft-lb) @ 1500 rpm.

Fuel tank capacity

219 L (58 gal)

Transmission

Range-shift 6-speed (3 speeds x 2 range, both forward and reverse). Front axle disconnect for 4 x 2 travel.

Electrical system

Two 12 V-maintenance free batteries. 12 V starting and lighting. Battery disconnect. CanBus Diagnostic System.

Drive

4 x 4

Steering

Fully independent power steering.

Front: full hydraulic steering wheel controlled.

Rear: Full hydraulic switch controlled.

Provides infinite variations 4-main steering modes: front only, rear only, crab, and coordinated.

Rear steer indicator.

Outside turning radius: 5,8 m (19.1 ft)

Inside turning radius: 4 m (13.1 ft)

Axles

Front: Drive/steer with differential and planetary reduction hubs rigid mounted to frame.

Rear: Drive/steer with differential and planetary reduction hubs pivot mounted to frame.

Oscillation lockouts

Automatic full hydraulic lockouts on rear axle permits 25,4 cm (10 in) oscillation only with boom centered over the front.

Brakes

Full hydraulic split circuit disc-type brakes operating on all wheels. Spring-applied, hydraulically released parking brake mounted on front axle.

Tires

Standard 20.5 x 25-24 bias ply

Lights

Full lighting including turn indicators, head, tail, brake and hazard warning lights.

Maximum speed

40 km/h (25 mph) @ 2500 rpm

*Denotes optional equipment

Specifications

Carrier continued

Gradeability (theoretical)

119% (at engine stall).

(Based on 28 365 kg [62,532 lb] GVW) 20.5 x 25 tires 31 m (102 ft) main boom, plus 13,7 m (45 ft) telescopic swingaway, 4305 kg (9490 lb) counterweight, 35 t (40 USt) hookblock and 6,8 t (7.5 USt) headache ball.

Miscellaneous standard equipment

Full width steel fenders, full length steel decking with anti-skid, dual rear view mirrors, hook-block tiedown, electronic back-up alarm, light package, front stowage well, tachometer/hourmeter, rear wheel position indicator, 36,000 Btu hot water cab heater, 28,500 Btu air conditioning, hoist mirrors, engine distress A/V warning system, combination lift/tie-down/towing lugs, coolant sight level indicator.

* Optional equipment

- Auxiliary Hoist Package: Includes model HP15C-17G auxiliary hoist with electronic hoist drum rotation indicator, hoist drum cable follower, 137 m (450 ft) of 16 mm (5/8 in) 35 x 7 class wire rope and auxiliary sheave boom nose.
- Auxiliary Light and Convenience Package: Includes cab mounted amber flashing light, hoist mounted work lights, and dual base boom mounted floodlights, LMI light bar (in cab), rubber mat for stowage trough.
- 360° NYC style mechanical swing lock
- Rear Pintle hook
- Cab-controlled cross axle differential locks (front and rear)
- PAT event recorder download kit

Denotes optional equipment

MAXIM Crane Works, L.P.
1-877-MAX-LIFT

Dimensions and weights

Dimensions

	Tire size	A	B	C	D	E	F	G	H	J	K	L	M
2 wheel steer	20.5 x 25	13 563 mm	13 328 mm	10 899 mm	10 236 mm	10 007 mm	8138 mm	7021 mm	2055 mm	25.0°	22.5°	17.3°	2606 mm
	16.0 x 25	13 563 mm	13 328 mm	10 899 mm	10 185 mm	9981 mm	8138 mm	7021 mm	2093 mm	26.0°	23.5°	18.3°	2536 mm
4 wheel steer	20.5 x 25	9797 mm	9490 mm	6732 mm	6061 mm	5832 mm	4000 mm	3498 mm	2055 mm	25.0°	22.5°	17.3°	2606 mm
	16.0 x 25	9797 mm	9490 mm	6732 mm	6010 mm	5806 mm	4000 mm	3498 mm	2093 mm	26.0°	23.5°	18.3°	2536 mm

Notes:
·All dimensions are for reference only
·Boom elevation is -3° to +76°
·Dimensions shown are based on 20.5 x 25 tires. Add 35.4 mm for 16.0 x 25 tires

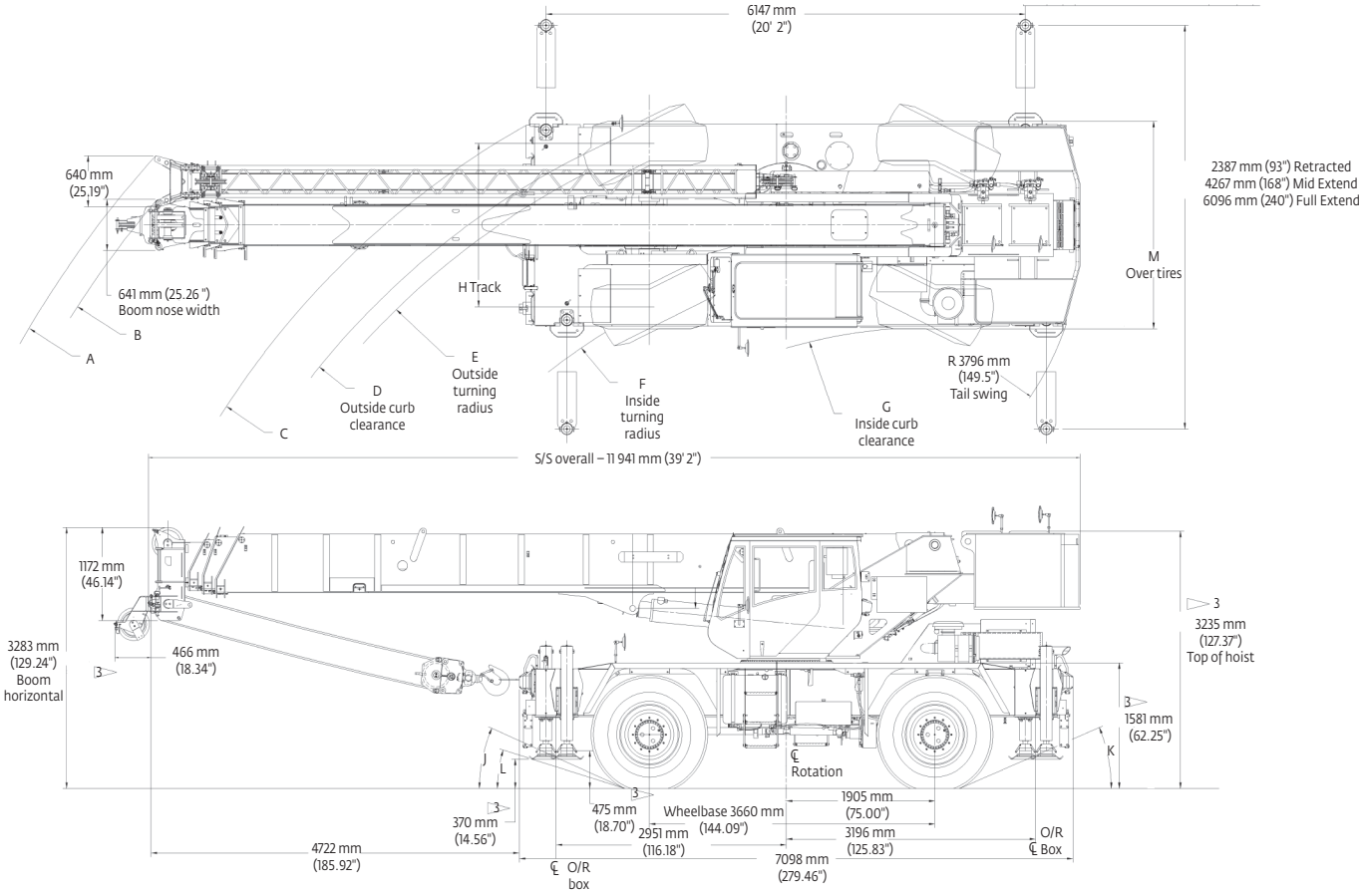

Weights

	GVW		Front		Rear	
	kg	(lb)	kg	(lb)	kg	(lb)
RT540E basic machine: Including 31 m (102 ft) main boom, main hoist with 137 m (450 ft) of rope, full counterweight + IPO 6,8 t (7.5 USt) headache ball, and 35 t (40 USt) hookblock	27 273	(60, 126)	13 012	(28,686)	14 261	(31,440)
Add: Auxiliary hoist + 137 m (450 ft) of 35 x 7 hoist cable and auxiliary boom nose ILO IPO C/W	27 500	(60,625)	13 089	(28,855)	14 411	(31,770)
Add: Fixed 7,9 m (26 ft) offsettable boom extension + extension hangers	28 196	(62,161)	14 345	(31,624)	13 852	(30,537)
Or add: 7,9 m - 13,7 m (26 ft - 45 ft) telescopic boom extension + extension hangers	28 365	(65,532)	14 539	(32,052)	13 826	(30,480)

Working range

102 ft main boom + 26 ft - 45 ft extension

(Boom deflection not shown) D6-829-103927

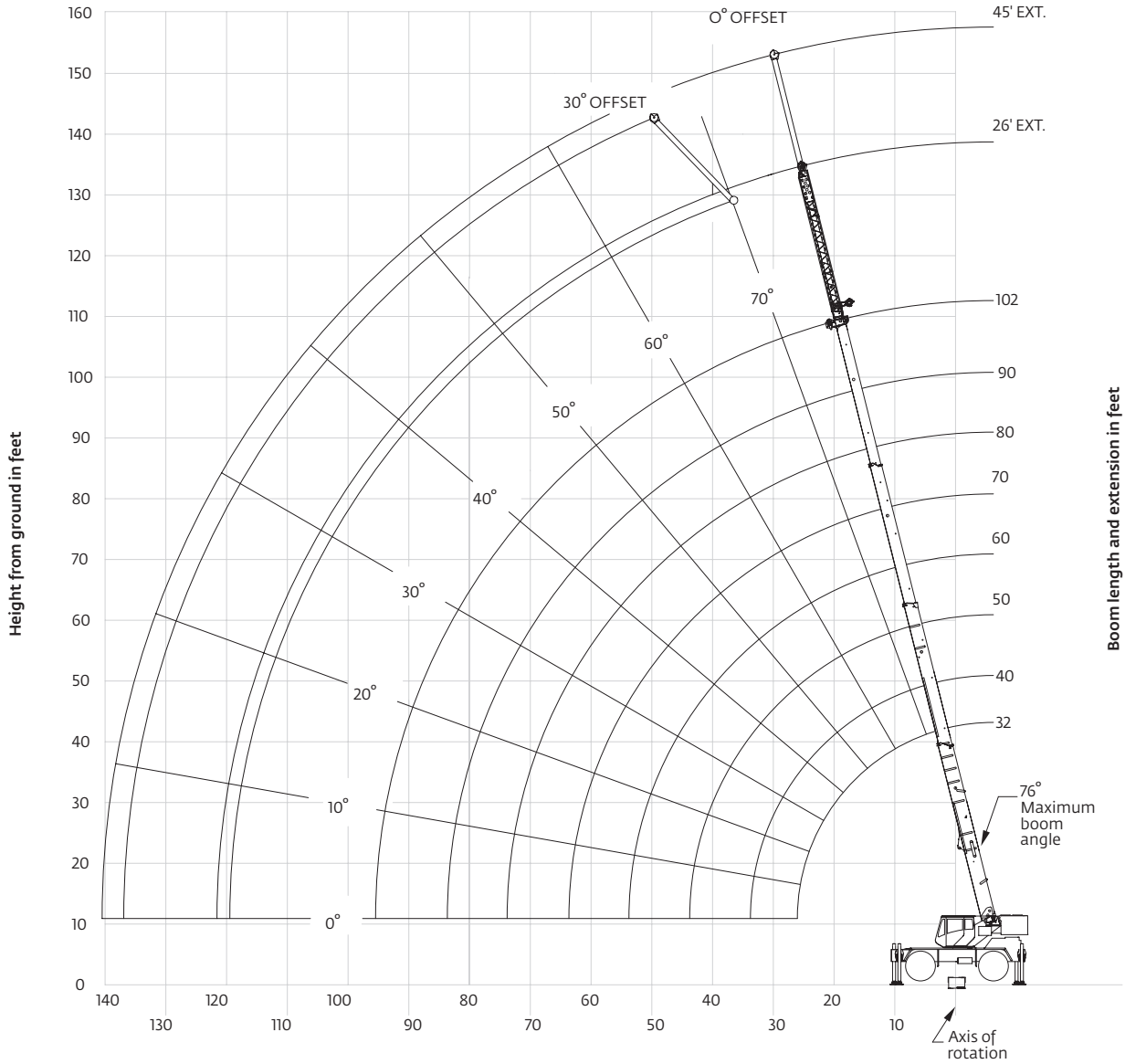

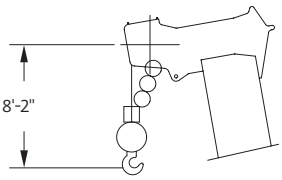

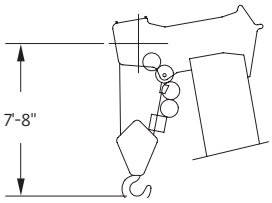

Dimensions are for largest Grove furnished hook block and headache ball, with anti-two block activated.

THIS CHART IS ONLY A GUIDE AND SHOULD NOT BE USED TO OPERATE THE CRANE.
The individual crane's load chart, operating instructions and other instructional plates must be read and understood prior to operating the crane

MAXIM Crane Works, L.P.
1-877-MAX-LIFT

Load chart

32 ft - 102 ft | 9490 lb | 100% | 360°
23 ft 4 in spread

Pounds

Feet	Main boom length in feet 32	40	50	60	70	80	90	102
8	80,000 (69)							
10	72,200 (65)	50,700 (70.5)	48,500 (75)					
12	61,000 (61)	50,700 (67.5)	48,500 (72.5)	*46,400 (76)				
15	47,950 (54)	48,400 (62.5)	48,500 (69)	44,300 (73)	*38,700 (76)			
20	34,550 (41)	35,000 (53.5)	35,400 (62.5)	35,300 (67.5)	31,000 (71.5)	29,700 (74)	*22,000 (76)	
25	26,300 (20.5)	26,800 (43.5)	27,200 (55.5)	27,400 (62.5)	25,800 (67)	24,600 (70.5)	22,000 (73)	*18,500 (76)
30		21,250 (30)	21,650 (47.5)	21,850 (56.5)	21,800 (62.5)	20,800 (66.5)	18,350 (69.5)	17,500 (73)
35			17,650 (38.5)	17,900 (50.5)	18,050 (57.5)	17,800 (62.5)	15,600 (66)	15,200 (70)
40			14,400 (26.5)	14,450 (43.5)	14,650 (52.5)	14,800 (58.5)	13,500 (62.5)	13,200 (66.5)
45				11,650 (35)	11,800 (46.5)	11,900 (54)	11,750 (59)	11,600 (63.5)
50				9480 (24.5)	9680 (40.5)	9770 (49)	9780 (55)	9790 (60.5)
55					7970 (33)	8080 (44)	8110 (51)	8130 (57)
60					6600 (23)	6720 (38)	6770 (46.5)	6800 (53.5)
65						5590 (31)	5670 (42)	5710 (49.5)
70						4640 (21.5)	4740 (36)	4800 (45.5)
75							3940 (29.5)	4040 (41)
80							3250 (21)	3360 (36)
85								2770 (30.5)
90								2250 (23)
95								1800 (9.5)
Minimum boom angle (°) for indicated length (no load)								0
Maximum boom length (ft) at 0° boom angle (no load)								102

NOTE: ( ) Boom angles are in degrees.
#LMI operating code. Refer to LMI manual for operating instructions.
*This capacity is based on maximum boom angle.

Lifting capacities at zero degree boom angle

Boom angle	Main boom length in feet 32	40	50	60	70	80	90	102
0°	24,950 (26)	18,100 (33.8)	12,150 (43.8)	8 180 (53.8)	5740 (63.8)	4030 (73.8)	2800 (83.8)	1760 (95.5)

NOTE: ( ) Reference radii in feet.

A6-829-104278

THIS CHART IS ONLY A GUIDE AND SHOULD NOT BE USED TO OPERATE THE CRANE.
The individual crane's load chart, operating instructions and other instructional plates must be read and understood prior to operating the crane

MAXIM Crane Works, L.P.
1-877-MAX-LIFT

Load chart

32 ft - 102 ft | 26 ft | 9490 lb | 100% | 360°

Pounds

Feet	26 ft LENGTH #0051 0° OFFSET	#0053 30° OFFSET
35	*8200 (76)	
40	8200 (72.5)	
45	8200 (70)	*5780 (76)
50	8150 (67.5)	5780 (72.5)
55	7500 (65)	5450 (70)
60	6440 (62.5)	4910 (67.5)
65	5460 (60)	4450 (64.5)
70	4620 (57.5)	4050 (62)
75	3900 (54.5)	3670 (59)
80	3260 (51.5)	3350 (56)
85	2710 (48.5)	3100 (53)
90	2210 (45)	2580 (49.5)
95	1770 (41.5)	2080 (46)
100	1380 (38)	1620 (41.5)
105	1020 (33.5)	1200 (37)
Min. boom angle for indicated length (no load)	32°	36°
Max. boom length at 0° boom angle (no load)	80 ft	

NOTE: ( ) Boom angles are in degrees.
#LMI operating code. Refer to LMI manual for instructions.
*This capacity based on maximum boom angle.

A6-829-104329

32 ft - 102 ft | 26 ft - 45 ft | 9490 lb | 100% | 360°

Pounds

Feet	26 ft LENGTH #0021 0° OFFSET	#0022 15° OFFSET	#0023 30° OFFSET	45 ft LENGTH #0041 0° OFFSET	#0042 15° OFFSET	#0043 30° OFFSET
35	*10,200 (76)					
40	9460 (72.5)	*7770 (76)		*5250 (76)		
45	8760 (70)	7370 (72)	*6030 (76)	5250 (73.5)		
50	8150 (67.5)	6870 (69.5)	5780 (72.5)	5050 (71.5)	3660 (76)	
55	7510 (65)	6050 (67)	5520 (70)	4650 (69.5)	3540 (72.5)	
60	6700 (62.5)	5350 (64.5)	5290 (67.5)	4290 (67)	3430 (70.5)	*3000 (76)
65	5990 (60)	4740 (62)	4810 (64.5)	4000 (65)	3320 (68.5)	2890 (72.5)
70	5240 (57.5)	4210 (59)	4270 (62)	3800 (63)	3220 (66)	2790 (70.5)
75	4400 (54.5)	3750 (56)	3800 (59)	3650 (60.5)	3130 (64)	2700 (68)
80	3670 (51.5)	3330 (53.5)	3380 (56)	3520 (58.5)	3000 (61.5)	2620 (65.5)
85	3050 (48.5)	2960 (50.5)	3010 (53)	3360 (56)	2880 (59)	2550 (63)
90	2500 (45)	2590 (47)	2670 (49.5)	3030 (53.5)	2770 (56.5)	2480 (60.5)
95	2020 (41.5)	2130 (43.5)	2270 (46)	2640 (51)	2680 (54)	2410 (57.5)
100	1590 (38)	1680 (40)	1790 (41.5)	2270 (48)	2570 (51.5)	2380 (55)
105	1200 (33.5)	1280 (35.5)	1360 (37)	1930 (45.5)	2260 (48.5)	2310 (52)
110				1630 (42.5)	1890 (45.5)	2030 (48.5)
115				1330 (39)	1550 (42)	1700 (45)
120				1040 (35.5)	1240 (38.5)	1400 (41)
125						1080 (36.5)
Min. boom angle for indicated length (no load)	29°	30.5°	36°	34°	34.5°	35°
Max. boom length at 0° boom angle (no load)		80 ft			80 ft	

NOTE: ( ) Boom angles are in degrees.
#LMI operating code. Refer to LMI manual for instructions.
*This capacity based on maximum boom angle.

A6-829-104322

Boom extension capacity notes:

1. All capacities above the bold line are based on structural strength of boom extension.
2. 26 ft fixed extension lengths may be used for single line lifting service.
3. Radii listed are for a fully extended boom with the boom extension erected. For main boom lengths less than fully extended, the rated loads are determined by boom angle. Use only the column which corresponds to the boom extension length and offset for which the machine is configured. For boom angles not shown, use the rating of the next lower boom angle.

Warning: Operation of this machine with heavier loads than the capacities listed is strictly prohibited. Machine tipping with boom extension occurs rapidly and without advance warning.

4. Boom angle is the angle above or below horizontal of the longitudinal axis of the boom base section after lifting rated load.
5. Capacities listed are with outriggers fully extended and vertical jacks set only.
6. When lifting over the main boom nose with 26 ft fixed extension erected, the outriggers must be fully extended or 50% extended (14 ft spread).

Boom extension capacity notes:

1. All capacities above the bold line are based on structural strength of boom extension.
2. 26 ft and 45 ft tele extension lengths may be used for single line lifting service.
3. Radii listed are for a fully extended boom with the boom extension erected. For main boom lengths less than fully extended, the rated loads are determined by boom angle. Use only the column which corresponds to the boom extension length and offset for which the machine is configured. For boom angles not shown, use the rating of the next lower boom angle.

Warning: Operation of this machine with heavier loads than the capacities listed is strictly prohibited. Machine tipping with boom extension occurs rapidly and without advance warning.

4. Boom angle is the angle above or below horizontal of the longitudinal axis of the boom base section after lifting rated load.
5. Capacities listed are with outriggers fully extended and vertical jacks set only.
6. When lifting over the main boom nose with 26 ft or 45 ft tele extension erected, the outriggers must be fully extended or 50% extended (14 ft spread).

THIS CHART IS ONLY A GUIDE AND SHOULD NOT BE USED TO OPERATE THE CRANE.
The individual crane's load chart, operating instructions and other instructional plates must be read and understood prior to operating the crane.

MAXIM Crane Works, L.P.
1-877-MAX-LIFT

Load chart

32 ft - 60 ft | 9490 lb | Stationary | 360°

Pounds

#9005

Feet	Main boom length in feet 32	40	50	60
10	24,050 (65)	24,100 (70.5)	23,000 (76)	
12	21,600 (61)	22,050 (67.5)	21,600 (72.5)	
15	15,250 (54)	15,550 (62.5)	16,100 (68.5)	13,900 (72.5)
20	9110 (41)	9380 (53.5)	9860 (62)	9860 (67.5)
25	5790 (20)	6050 (43)	6400 (55)	6510 (62)
30		3970 (29.5)	4240 (47.5)	4370 (56)
35			2770 (38)	2900 (50)
40			1,690 (26)	1840 (43)
45				1030 (34.5)
Minimum boom angle (°) for indicated length (no load)				33
Maximum boom length (ft.) at 0° boom angle (no load)				50

NOTE: ( ) Boom angles are in degrees.
#LMI operating code. Refer to LMI manual for operating instructions.

Lifting capacities at zero degree boom angle

Boom angle	Main boom length in feet 32	40	50
0°	5290 (26)	2850 (33.8)	1060 (43.8)

NOTE: ( ) Reference radii in feet.

A6-829-104281

32 ft - 60 ft | 9490 lb | Pick and carry (Max. 2.5 mph) 20.5 x 25 tires | Defined arc over front

Pounds

#9006

Feet	Main boom length in feet 32	40	50	60
10	27,150 (65)	26,900 (70.5)		
12	23,350 (61)	23,250 (67.5)		
15	18,950 (54)	19,100 (62.5)	19,400 (69)	
20	13,700 (41)	14,200 (53.5)	14,500 (62.5)	14,550 (67.5)
25	10,100 (20)	10,750 (43.5)	11,150 (55.5)	11,200 (62)
30		8290 (30)	8620 (47.5)	8790 (56.5)
35			6710 (38.5)	6890 (50)
40			5210 (26.5)	5390 (43)
45				4180 (35)
50				3190 (24)
Minimum boom angle (°) for indicated length (no load)				0
Maximum boom length (ft) at 0° boom angle (no load)				60

NOTE: ( ) Boom angles are in degrees.
#LMI operating code. Refer to LMI manual for operating instructions.

Lifting capacities at zero degree boom angle

Boom Angle	Main boom length in feet 32	40	50	60
0°	9520 (26)	6830 (33.8)	4280 (43.8)	2560 (53.8)

NOTE: ( ) Reference radii in feet.

A6-829-104282

Notes to all rubber capacity charts:

1.Capacities are in pounds and do not exceed 75% of tipping loads as determined by test in accordance with SAE J765.

2.Capacities are applicable to machines equipped with 20.5 x 25 (24 ply) tires at 75 psi cold inflation pressure, and 16.00 x 25 (28 ply) tires at 100 psi cold inflation pressure.

3.Capacities appearing above the bold line are based on structural strength and tipping should not be relied upon as a capacity limitation.

4.Capacities are applicable only with machine on firm level surface.

5.On rubber lifting with boom extensions not permitted.

6.For pick and carry operation, boom must be centered over front of machine, mechanical swing lock engaged and load restrained from swinging. When handling loads in the structural range with capacities close to maximum ratings, travel should be reduced to creep speeds.

7.Axle lockouts must be functioning when lifting on rubber.

8.All lifting depends on proper tire inflation, capacity and condition. Capacities must be reduced for lower tire inflation pressures. See lifting capacity chart for tire used. Damaged tires are hazardous to safe operation of crane.

9.Creep - Not over 200 ft of movement in any 30 minute period and not exceeding 1 mph.

THIS CHART IS ONLY A GUIDE AND SHOULD NOT BE USED TO OPERATE THE CRANE.
The individual crane's load chart, operating instructions and other instructional plates must be read and understood prior to operating the crane

MAXIM Crane Works, L.P.
1-877-MAX-LIFT

Loadchart

32 ft - 102 ft | 9490 lb | 50% 14 ft spread | 360°

Pounds

#4001

Feet	Main boom length in feet 32	40	50	60	70	80	90	102
8	77,000 (69)							
10	66,250 (65)	50,700 (70.5)	48,500 (75)					
12	57,950 (61)	50,700 (67.5)	48,500 (72.5)	*46,400 (76)				
15	46,300 (54)	44,200 (62.5)	41,800 (69)	39,550 (73)	*37,550 (76)			
20	27,100 (41)	27,700 (53.5)	27,050 (62.5)	25,950 (67.5)	24,950 (71.5)	24,000 (74)	*22,000 (76)	
25	17,650 (20.5)	18,250 (43.5)	18,500 (55.5)	18,450 (62.5)	18,050 (67)	17,450 (70.5)	16,950 (73)	*16,350 (76)
30		12,850 (30)	13,200 (47.5)	13,300 (56.5)	13,550 (62.5)	13,250 (66.5)	12,950 (69.5)	12,500 (73)
35			9790 (38.5)	9910 (50.5)	10,150 (57.5)	10,250 (62.5)	10,100 (66)	9830 (70)
40			7400 (26.5)	7520 (43.5)	7770 (52.5)	7910 (58.5)	7950 (62.5)	7820 (66.5)
45				5760 (35)	5970 (46.5)	6150 (54)	6180 (59)	6190 (63.5)
50				4410 (24.5)	4590 (40.5)	4750 (49)	4820 (55)	4850 (60.5)
55					3500 (33)	3630 (44)	3710 (51)	3780 (57)
60					2610 (23)	2730 (38)	2810 (46.5)	2890 (53.5)
65						1980 (31)	2070 (42)	2150 (49.5)
70						1350 (21.5)	1440 (36)	1530 (45.5)
75								1000 (41)
Minimum boom angle (°) for indicated length (no load)					0		21	36
Maximum boom length (ft) at 0° boom angle (no load)							80	

NOTE: ( ) Boom angles are in degrees.
#LMI operating code. Refer to LMI manual for operating instructions.
*This capacity is based on maximum boom angle.

Lifting capacities at zero degree boom angle

Boom angle	Main boom length in feet 32	40	50	60	70
0°	16,300 (26)	10,150 (33.8)	6030 (43.8)	3580 (53.8)	2050 (63.8)

NOTE: ()Reference radii in feet

A6-829-104279

32 ft - 102 ft | 9490 lb | 0% 7.8 ft spread | 360°

Pounds

#8001

Feet	Main boom length in feet 32	40	50	60	70	80	90	102
8	51,950 (69)							
10	37,800 (65)	35,900 (70.5)	33,600 (75)					
12	29,050 (61)	28,100 (67.5)	26,600 (72.5)	*25,150 (76)				
15	20,850 (54)	20,450 (62.5)	19,750 (69)	18,850 (73)	*18,000 (76)			
20	12,500 (41)	13,050 (53.5)	12,950 (62.5)	12,600 (67.5)	12,150 (71.5)	11,700 (74)	*11,250 (76)	
25	7950 (20.5)	8460 (43.5)	8700 (55.5)	8760 (62.5)	8580 (67)	8300 (70.5)	8050 (73)	*7720 (76)
30		5610 (30)	5890 (47.5)	6000 (56.5)	6110 (62.5)	5980 (66.5)	5840 (69.5)	5600 (73)
35			3980 (38.5)	4090 (50.5)	4350 (57.5)	4270 (62.5)	4200 (66)	4060 (70)
40			2600 (26.5)	2710 (43.5)	2940 (52.5)	2970 (58.5)	2940 (62.5)	2850 (66.5)
45				1670 (35)	1860 (46.5)	1960 (54)	1950 (59)	1890 (63.5)
50					1020 (40.5)	1160 (49)	1160 (55)	1110 (60.5)
Minimum boom angle (°) for indicated length (no load)				0	33	44	51	57
Maximum boom length (ft) at 0° boom angle (no load)						60		

NOTE: ( ) Boom angles are in degrees.
#LMI operating code. Refer to LMI manual for operating instructions.
*This capacity is based on maximum boom angle.

Lifting capacities at zero degree boom angle

Boom angle	Main boom length in feet 32	40	50
0°	7230 (26)	4060 (33.8)	1790 (43.8)

NOTE: () Reference radii in feet

A6-829-104280

THIS CHART IS ONLY A GUIDE AND SHOULD NOT BE USED TO OPERATE THE CRANE.
The individual crane's load chart, operating instructions and other instructional plates must be read and understood prior to operating the crane.

MAXIM Crane Works, L.P.
1-877-MAX-LIFT

Load chart

32 ft - 102 ft | 26 ft | 9490 lb | 50% 14 ft spread | 360°

Pounds

Feet	26 ft LENGTH #4051 0° OFFSET	#4053 30° OFFSET
35	*8200 (76)	
40	7240 (72.5)	
45	5780 (70)	*5780 (76)
50	4610 (67.5)	5740 (72.5)
55	3650 (65)	4650 (70)
60	2850 (62.5)	3720 (67.5)
65	2140 (60)	2900 (64.5)
70	1540 (57.5)	2210 (62)
75	1030 (54.5)	1620 (59)
80		1100 (56)
Min. boom angle for indicated length (no load)	51.5°	53°
Max. boom length at 0° boom angle (no load)	60 ft	

A6-829-104330

NOTE: ( ) Boom angles are in degrees.
#LMI operating code. Refer to LMI manual for instructions.
*This capacity based on maximum boom angle.

Boom extension capacity notes:

1. All capacities above the bold line are based on structural strength of boom extension.
2. 26 ft fixed extension lengths may be used for single line lifting service.
3. Radii listed are for a fully extended boom with the boom extension erected. For main boom lengths less than fully extended, the rated loads are determined by boom angle. Use only the column which corresponds to the boom extension length and offset for which the machine is configured. For boom angles not shown, use the rating of the next lower boom angle.

Warning: Operation of this machine with heavier loads than the capacities listed is strictly prohibited. Machine tipping with boom extension occurs rapidly and without advance warning.

4. Boom angle is the angle above or below horizontal of the longitudinal axis of the boom base section after lifting rated load.
5. Capacities listed are with outriggers properly extended and vertical jacks set only.
6. When lifting over the main boom nose with 26 ft fixed extension erected, the outriggers must be fully extended or 50% extended (14 ft spread).

32 ft - 102 ft | 26 ft - 45 ft | 9490 lb | 50% 14 ft spread | 360°

Pounds

Feet	26 ft LENGTH #4021 0° OFFSET	#4022 15° OFFSET	#4023 30° OFFSET	45 ft LENGTH #4041 0° OFFSET	#4042 15° OFFSET	#4043 30° OFFSET
35	*9120 (76)					
40	7240 (72.5)	*7770 (76)		*5250 (76)		
45	5780 (70)	6460 (72)	*6030 (76)	5250 (73.5)		
50	4610 (67.5)	5200 (69.5)	5740 (72.5)	5050 (71.5)	3660 (76)	
55	3650 (65)	4180 (67)	4650 (70)	4280 (69.5)	3540 (72.5)	
60	2850 (62.5)	3320 (64.5)	3720 (67.5)	3480 (67)	3430 (70.5)	*3000 (76)
65	2140 (60)	2550 (62)	2900 (64.5)	2820 (65)	3320 (68.5)	2890 (72.5)
70	1540 (57.5)	1900 (59)	2210 (62)	2260 (63)	2880 (66)	2790 (70.5)
75	1030 (54.5)	1350 (56)	1620 (59)	1740 (60.5)	2300 (64)	2700 (68)
80			1100 (56)	1300 (58.5)	1800 (61.5)	2240 (65.5)
85					1360 (59)	1750 (63)
90						1320 (60.5)
Min. boom angle for indicated length (no load)	51.5°	53.5°	53°	56°	56.5°	57.5°
Max. boom length at 0° boom angle (no load)		60 ft			60 ft	

A6-829-104323

NOTE: ( ) Boom angles are in degrees.
#LMI operating code. Refer to LMI manual for instructions.
*This capacity based on maximum boom angle.

Boom extension capacity notes:

1. All capacities above the bold line are based on structural strength of boom extension.
2. 26 ft and 45 ft tele extension lengths may be used for single line lifting service.
3. Radii listed are for a fully extended boom with the boom extension erected. For main boom lengths less than fully extended, the rated loads are determined by boom angle. Use only the column which corresponds to the boom extension length and offset for which the machine is configured. For boom angles not shown, use the rating of the next lower boom angle.

Warning: Operation of this machine with heavier loads than the capacities listed is strictly prohibited. Machine tipping with boom extension occurs rapidly and without advance warning.

4. Boom angle is the angle above or below horizontal of the longitudinal axis of the boom base section after lifting rated load.
5. Capacities listed are with outriggers properly extended and vertical jacks set only.
6. When lifting over the main boom nose with 26 ft or 45 ft tele extension erected, the outriggers must be fully extended or 50% extended (14 ft spread).

THIS CHART IS ONLY A GUIDE AND SHOULD NOT BE USED TO OPERATE THE CRANE.
The individual crane's load chart, operating instructions and other instructional plates must be read and understood prior to operating the crane.

Load handling

Weight reductions for load handling devices	
26 ft fixed boom extension	**lb**
* Erected	2750
26 ft - 45 ft telescopic boom extension	
* Erected (retracted) -	3750
* Erected (extended) -	5010
Auxiliary boom nose	**lb**
	105
Hookblocks and headache balls	**lb**
35 USt, 3 sheave (14 in sheave)	623 +
35 USt, 3 sheave (12 in sheave)	599 +
35 USt, 4 sheave (CE)	774 +
7.5 USt, overhaul ball	369 +

* Reduction of main boom capacities
+ Refer to rating plate for actual weight

When lifting over swingaway and/or jib combinations, deduct total weight of all load handling devices reeved over main boom nose directly from swingaway or jib capacity.

NOTE: All load handling devices and boom attachments are considered part of the load and suitable allowances MUST BE MADE for their combined weights. Weights are for Grove furnished equipment.

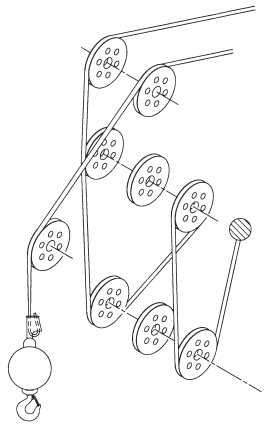

Line pulls and reeving information			
Hoists	**Cable specs**	**Permissable line pulls**	**Nominal cable length**
Main	16 mm (5/8 in) 6 x 37 class EIPS, IWRC Special Flexible Min. Breaking Str. 41,200 lb	11,640 lb	450 ft
Main and auxiliary	16 mm (5/8 in) Flex-X 35 Rotation resistant (non-rotating) Min. breaking Str. 61,200 lb	11,640 lb	450 ft

Hoist performance				
Wire rope layer	**Hoist line pulls two-speed hoist**		**Drum rope capacity (ft)**	
	Low available lb*	**High available lb***	**Layer**	**Total**
1	11,640	7420	77	77
2	10,480	6680	85	162
3	9530	6070	94	256
4	8730	5570	102	358
5	8060	5140	111	469
6	7490	4770	119	588

* Max lifting capacity: 6 x 37 class = 11,640 lb
35 x 7 class = 11,640 lb

Working area diagram

Diagram of working area

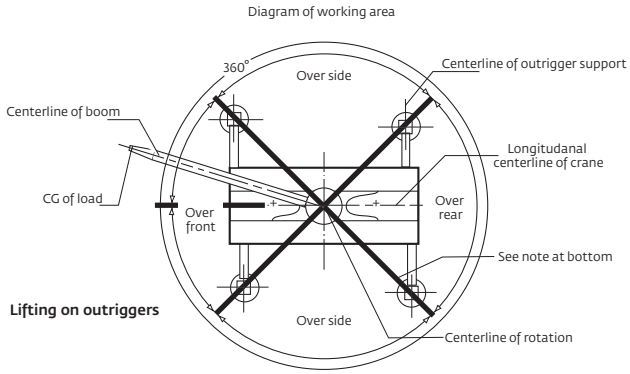

Lifting on outriggers

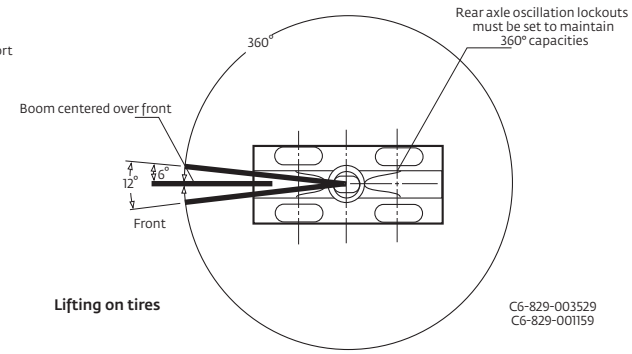

Lifting on tires

C6-829-003529
C6-829-001159

Bold lines determine the limiting position of any load for operation within working areas indicated.

THIS CHART IS ONLY A GUIDE AND SHOULD NOT BE USED TO OPERATE THE CRANE.
The individual crane's load chart, operating instructions and other instructional plates must be read and understood prior to operating the crane.

Notes

maximcrane.com

MAXIM Crane Works, L.P.
1-877-MAX-LIFT

Grove Manitowoc National Crane Potain

Manitowoc

Regional headquarters

Manitowoc - Americas
Manitowoc, Wisconsin, USA
Tel: +1 920 684 6621
Fax: +1 920 683 6277

Shady Grove, Pennsylvania, USA
Tel: +1 717 597 8121
Fax: +1 717 597 4062

Manitowoc - Europe, Middle East & Africa
Ecully, France
Tel: +33 (0)4 72 18 20 20
Fax: +33 (0)4 72 18 20 00

Manitowoc - Asia Pacific
Shanghai, China
Tel: +86 21 6457 0066
Fax: +86 21 6457 4955

Regional offices

Americas
Brazil
Alphaville
Mexico
Monterrey
Chile
Santiago

Europe, Middle East & Africa
Algeria
Hydra
Czech Republic
Netvorice
France
Baudemont
Cergy
Decines
Germany
Langenfeld
Hungary
Budapest
Italy
Parabiago
Netherlands
Breda
Poland
Warsaw
Portugal
Baltar
Lisbon
Russia
Moscow
U.A.E.
Dubai
U.K.
Gawcott

Asia - Pacific
Australia
Brisbane
Melbourne
Sydney
China
Beijing
Xi'an
India
Hyderabad
Pune
Korea
Seoul
Philippines
Makati City
Singapore

Factories

Brazil
Alphaville
China
TaiAn
Zhangjiagang
France
Charlieu
La Clayette
Moulins
Germany
Wilhelmshaven
India
Pune
Italy
Niella Tanaro
Portugal
Baltar
Fânzeres
Slovakia
Saris
USA
Manitowoc
Port Washington
Shady Grove

This document is non-contractual. Constant improvement and engineering progress make it necessary that we reserve the right to make specification, equipment, and price changes without notice. Illustrations shown may include optional equipment and accessories and may not include all standard equipment.

©2009 Manitowoc
Printed in USA
Form No. RT540E
Part No. 07-001-2M-309